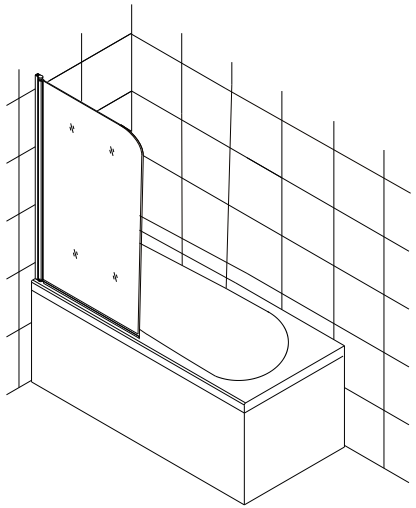

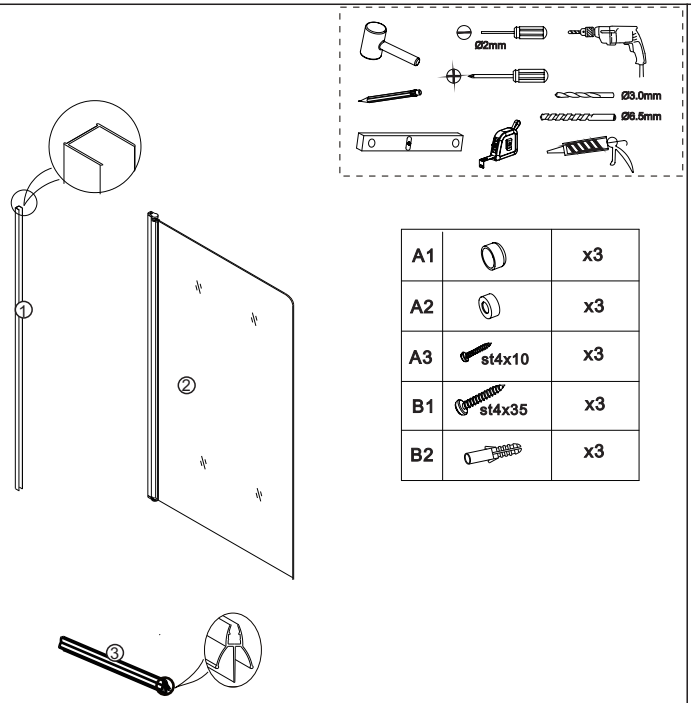

A1		x3
A2		x3
A3	st4x10	x3
B1	st4x35	x3
B2		x3

1

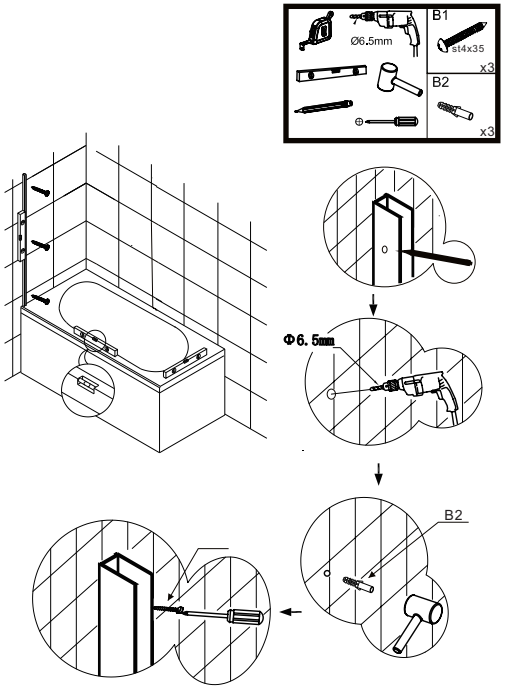

2

Max side profile adjustment:	10mm

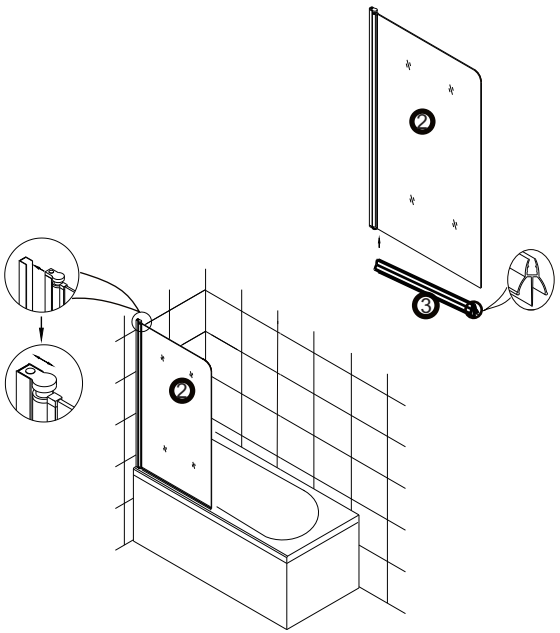

3

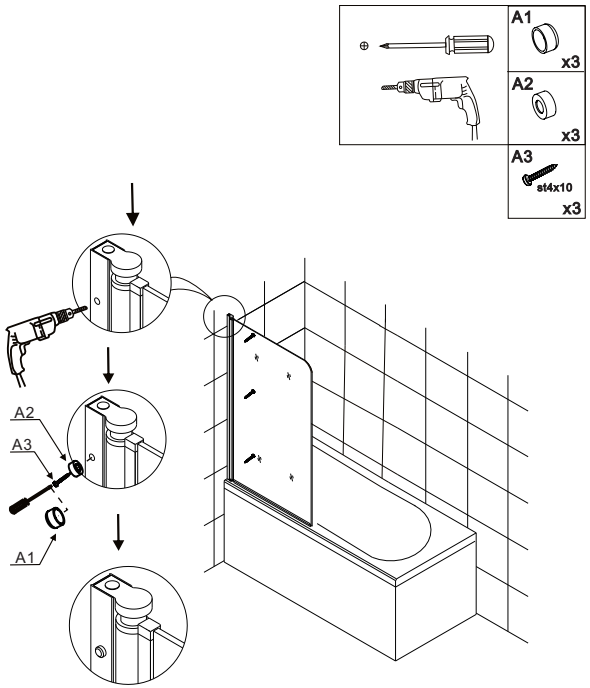

4

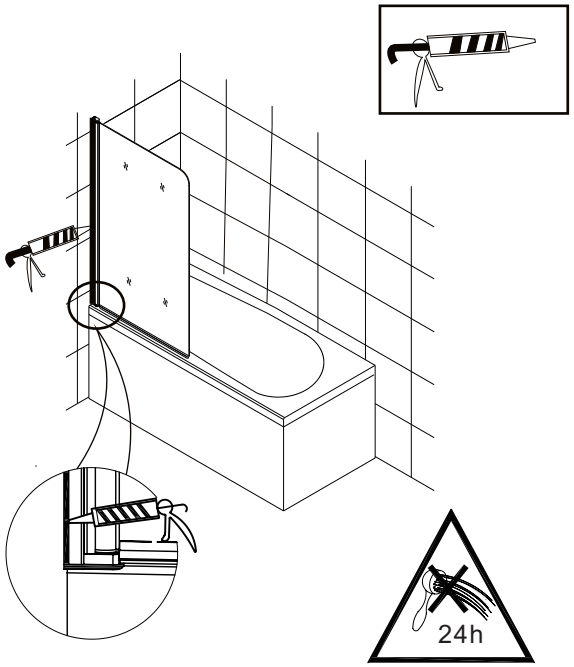

5