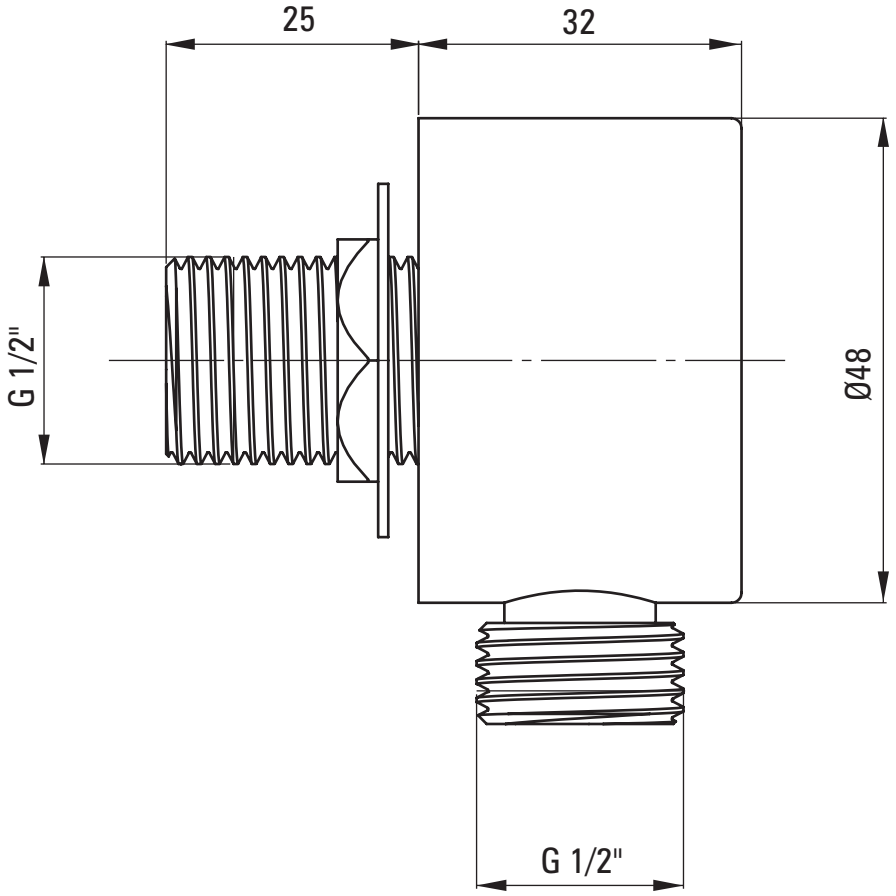
25
32
G 1/2"
Ø48
G 1/2"